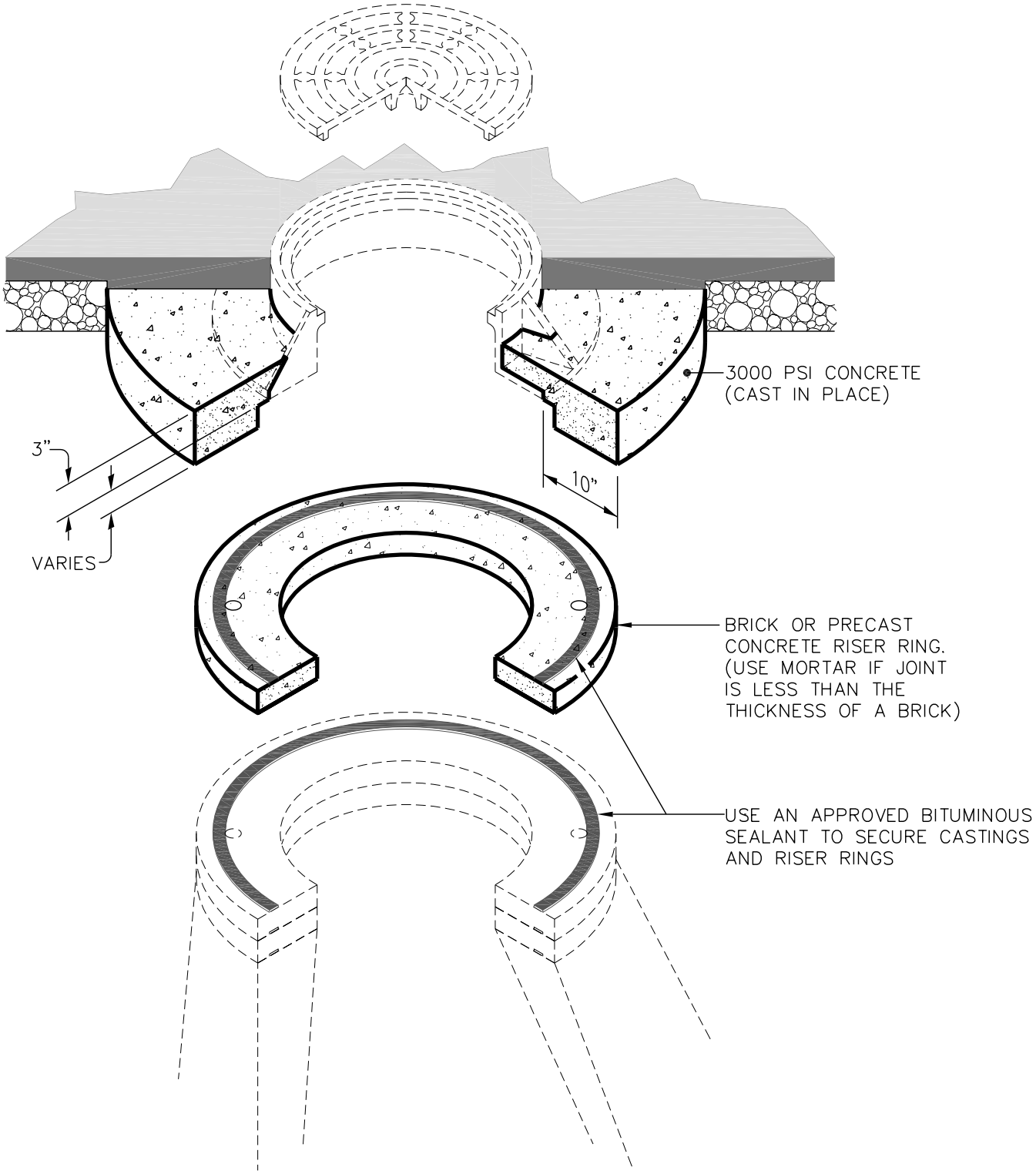

NOTES:

1. SIMILAR DETAIL TO BE USED FOR LAMPSTACKS.

THE CITY OF LYNCHBURG

RAISING MANHOLES
and LAMPSTACKS

USE WITH THE CITY OF LYNCHBURG STANDARD SPECIFICATIONS ONLY

SCALE:	DETAIL #
NOT TO SCALE	25.08
REVISION DATE:	SHEET #:
11-06-2006	1 OF 1